463 SERIES
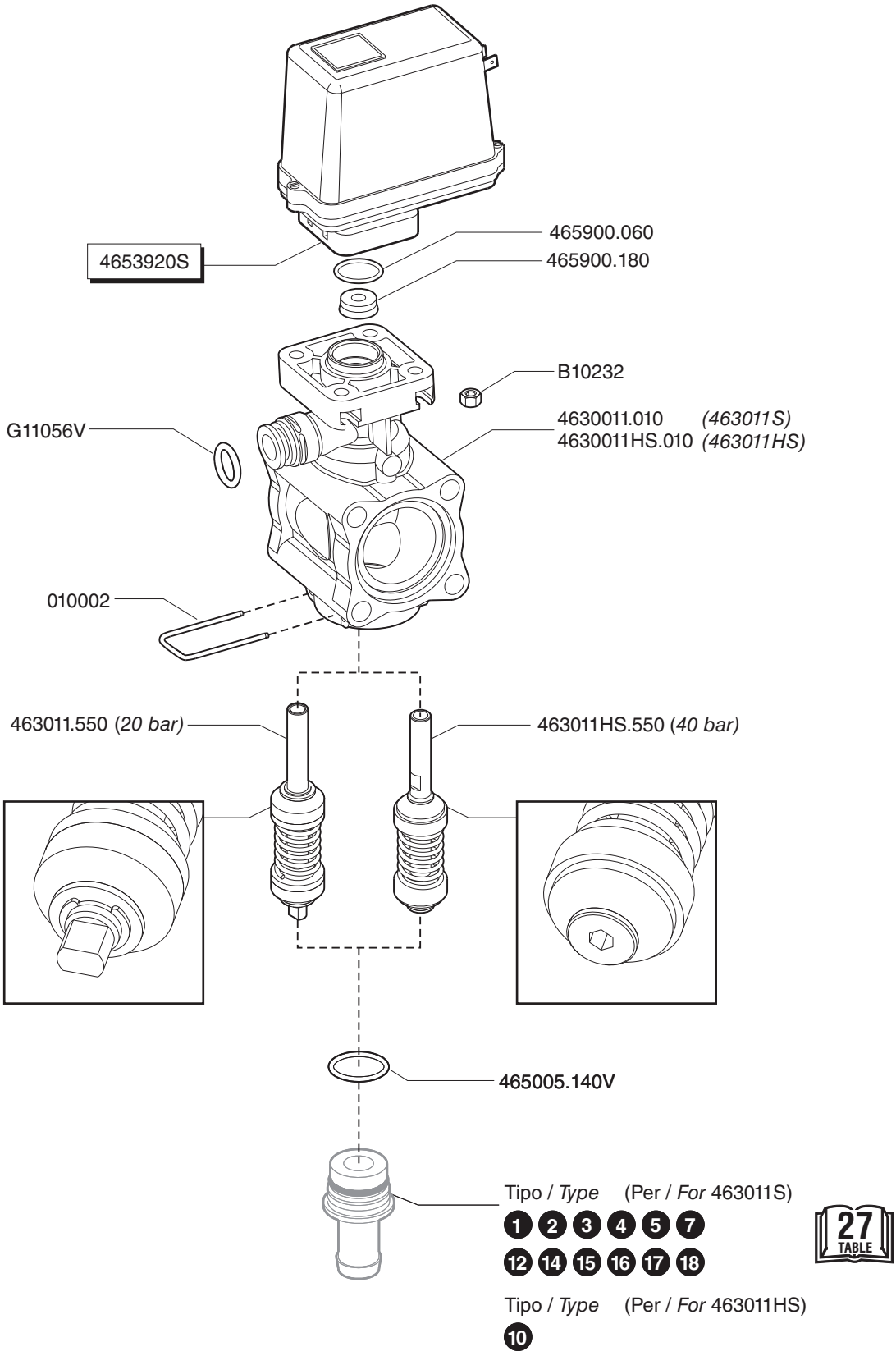
CODE
463011HS
463011S